hpcorse
MADE IN ITALY

EXHAUST COMPONENTS
Made in Italy

hpcorse
MADE IN ITALY

Dal 1993
una storia di passione tutta italiana

From 1993
A story of passion all italian

COSTRUISCI IL TUO SCARICO SPECIALE

HP Corse Special Lab lavora a stretto contatto con i migliori preparatori nazionali ed internazionali di "SPECIAL". Fornisce direttamente i silenziatori della serie HYDROFORM, EVOLUZIONE e GP-07 in kit di assemblaggio, con staffa standard, ganci e molla, db-killer a scelta e una linea di raccordi e curve che soddisfino ogni esigenza costruttiva.

BUILD YUOR SPECIAL EXHAUST

HP Corse "laboratory" works closely with the best national and international operators of "SPECIAL" moto's. We manufacture in our own workshops prototypes directly on the customer's motorbike or we supply single terminals of HYDROFORM, EVOLUZIONE and GP-07 series to those who desire to build the exhaust system on their own. We also produce customized curves and flanges.

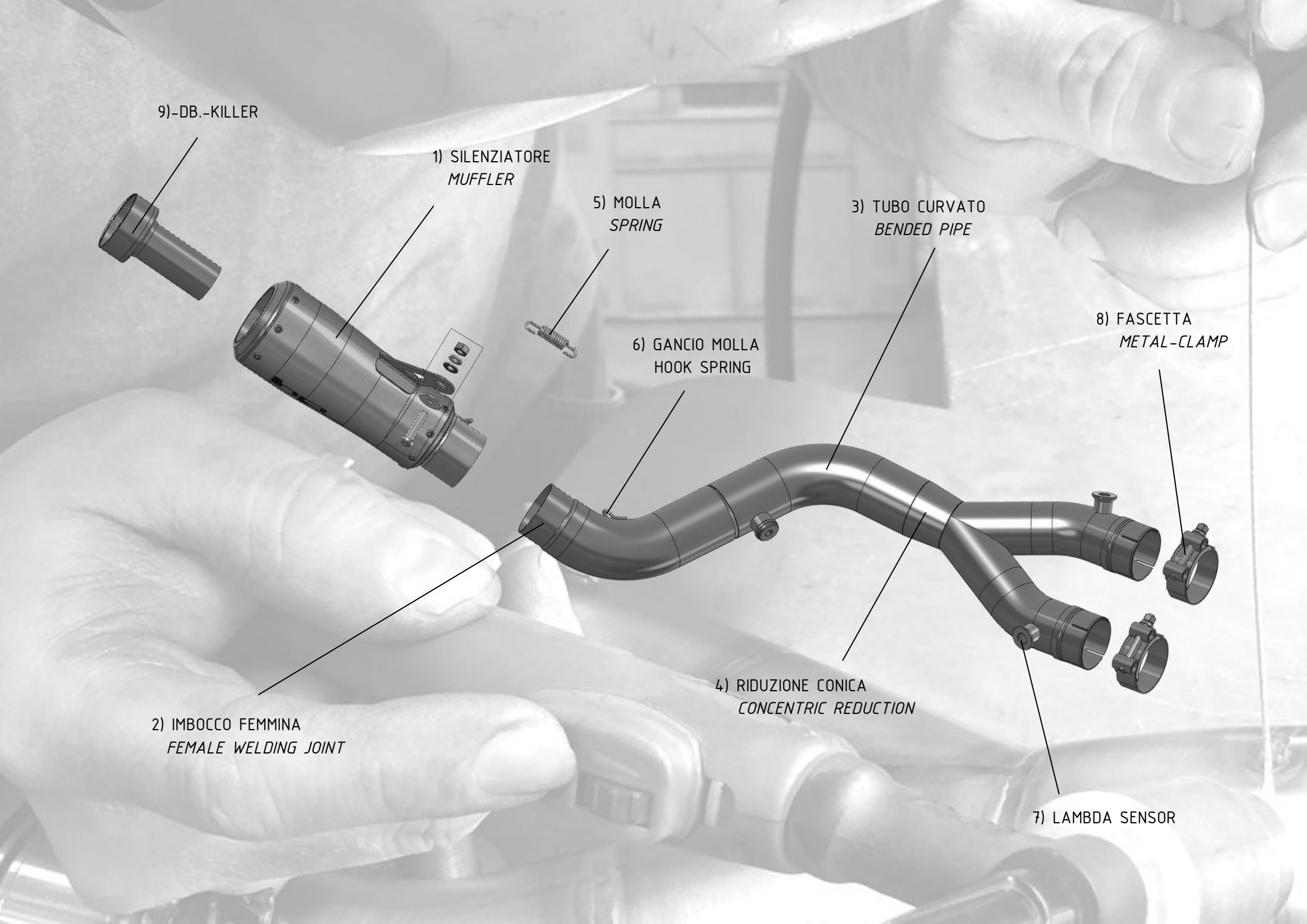
9)-DB.-KILLER
1) SILENZIATORE
MUFFLER
5) MOLLA
SPRING
3) TUBO CURVATO
BENDED PIPE
8) FASCETTA
METAL-CLAMP
6) GANCIO MOLLA
HOOK SPRING
4) RIDUZIONE CONICA
CONCENTRIC REDUCTION
2) IMBOCCO FEMMINA
FEMALE WELDING JOINT
7) LAMBDA SENSOR

ciò che serve/what *you need*

1) SILENZIATORE/*MUFFLER*
2) IMBOCCO FEMM./*FEMALE WELDING JOINT*
3) TUBO CURVATO/*BENDED PIPE*
4) RIDUZIONE CONICA/*CONCENTRIC REDUCTION*
5) MOLLA OSCILLANTE/ SWIVEL HOOK*SPRING*
6) GANCI PER MOLLE/*HOOK SPRING*
7) LAMBDA SENSOR
8) FASCETTE/*METAL CLAMP*
9) DB-KILLER

STAINLESS BRACKET Thk 2.5

Cod. PAM.005.227

HYDROFORM (DESTRO-RIGHT)

Cod. PAM.005.182

HYDROFORM (SINISTRO-LEFT)

Cod. PAM.005.234

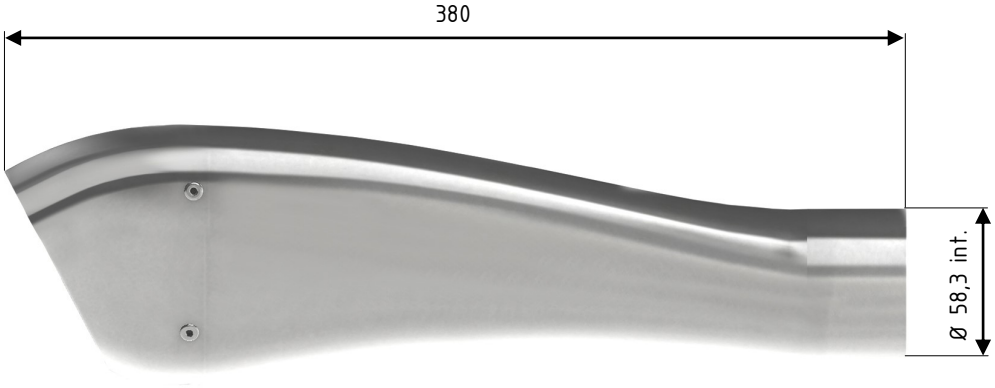

DB-KILLER Ø 30 mm

Cod. PAM.005.219

DB-KILLER Ø 35 mm

Cod. PAM.005.220

DB-KILLER Ø 40 mm

Cod. PAM.005.193

STAINLESS BRACKET Thk 2.5

Cod. PAM.005.227

HYDROFORM-CLASSIC (DESTRO-RIGHT)

Cod. PAM.005.162

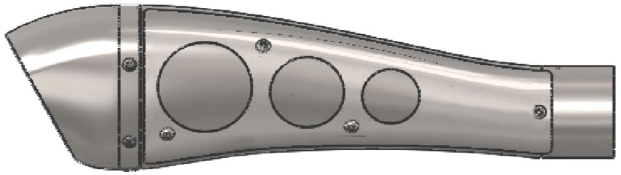

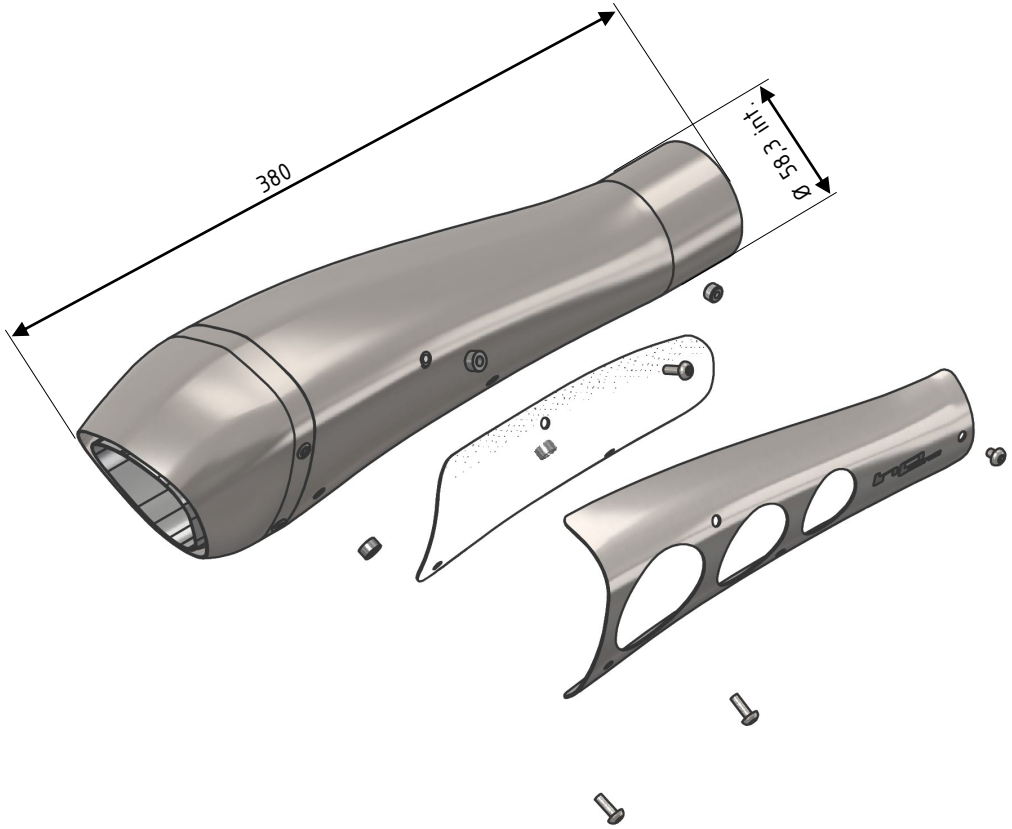

DB-KILLER Ø 30 mm

Cod. PAM.005.219

DB-KILLER Ø 35 mm

Cod. PAM.005.220

DB-KILLER Ø 40 mm

Cod. PAM.005.193

Mufflers

HYDROFORM CORSA

STAINLESS BRACKET Thk 2.5

Cod. PAM.005.227

HYDROFORM-CORSA (DESTRO-RIGHT)
Cod. PAM.005.197 Megaphone
Cod. PAM.005.198 Silencer

HYDROFORM-CORSA (SINISTRO-LEFT)
Cod. PAM.005.236 Megaphone
Cod. PAM.005.238 Silencer

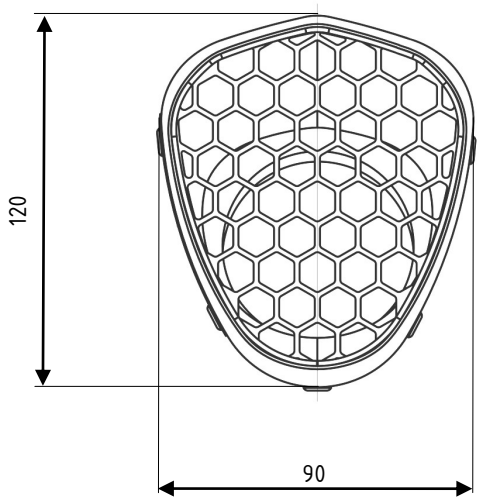

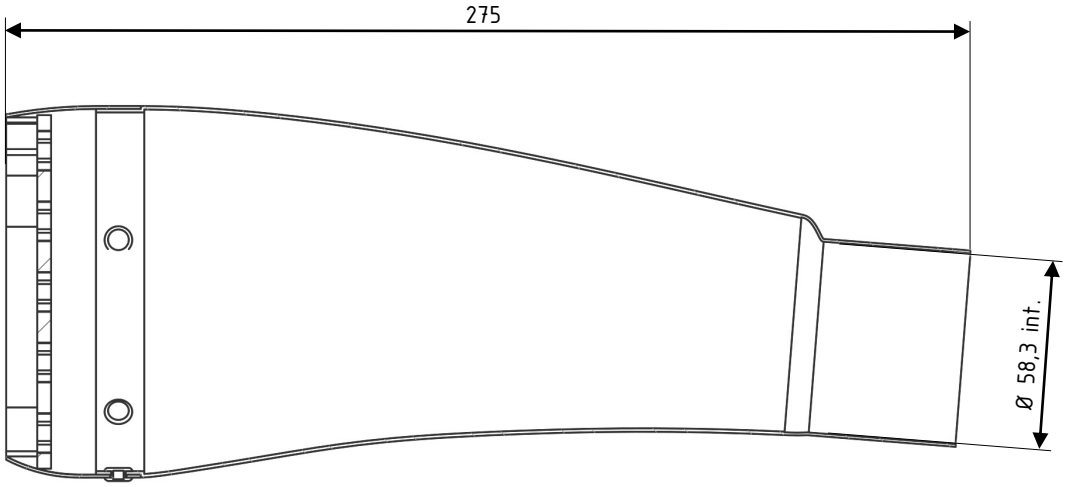

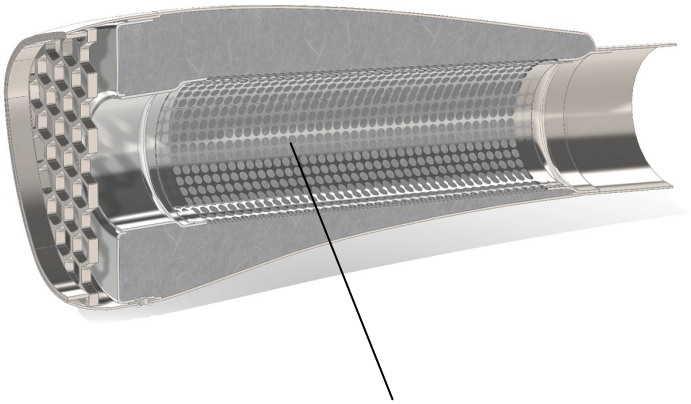

SILENCER with acustic components and internal sound proofing

MEGAOPHONE without acustic components and internal sound proofing

GP-07 SILVER (DESTRO-RIGHT)

Cod. PAM.005.187

GP-07 SILVER (SINISTRO-LEFT)

Cod. PAM.005.000

GP-07 BLACK (DESTRO-RIGHT)

Cod. PAM.005.225

GP-07 BLACK (SINISTRO-LEFT)

Cod. PAM.005.000

DB-KILLER Ø 40 mm

Cod. PAM.005.082 GRID

DB-KILLER Ø 40 mm

Cod. PAM.005.084 RING

STAINLESS BRACKET Thk 2.5

Cod. PAM.005.218

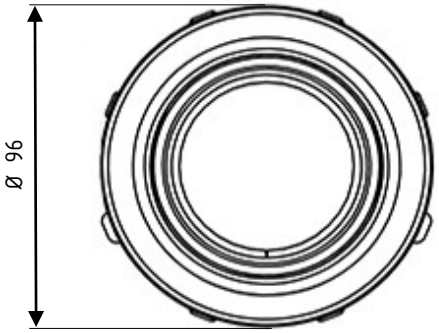
Ø 96

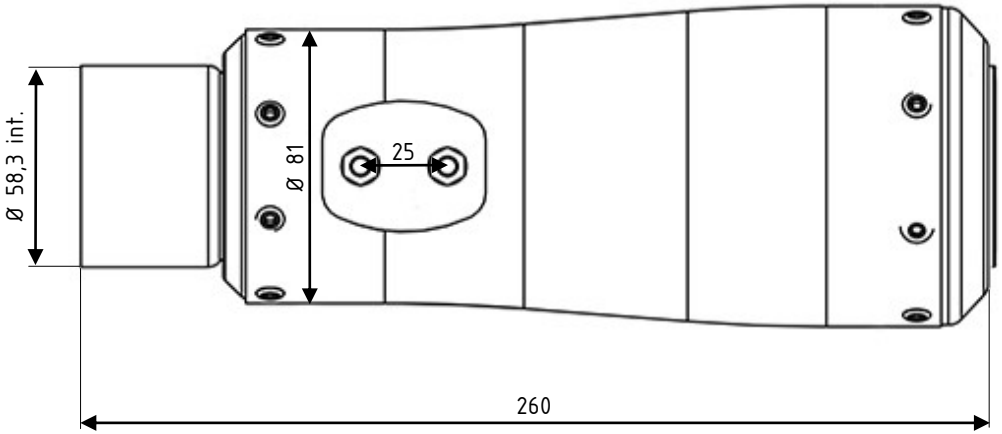
Ø 58,3 int.
Ø 81
25
260

EXAMPLE
STD EQUIPMENT

EVOXTREME BLACK (DESTRO-RIGHT)

Cod. PAM.005.155

EVOXTREME BLACK (SINISTRO-LEFT)

Cod. PAM.005.242

EVOXTREME SILVER (DESTRO-RIGHT)

Cod. PAM.005.156

EVOXTREME SILVER (SINISTRO-LEFT)

Cod. PAM.005.243

STAINLESS BRACKET Thk 1.2

Cod. PAM.005.217

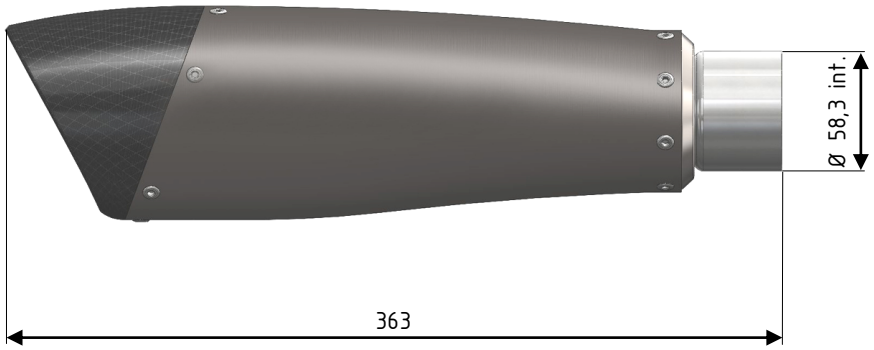

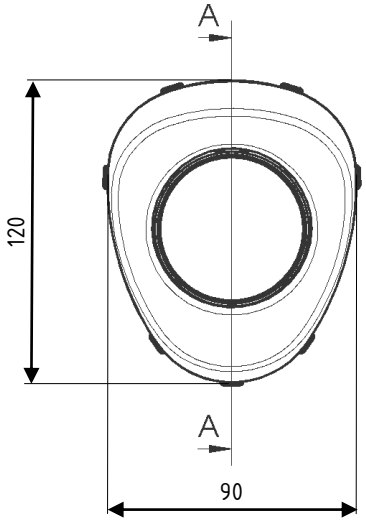

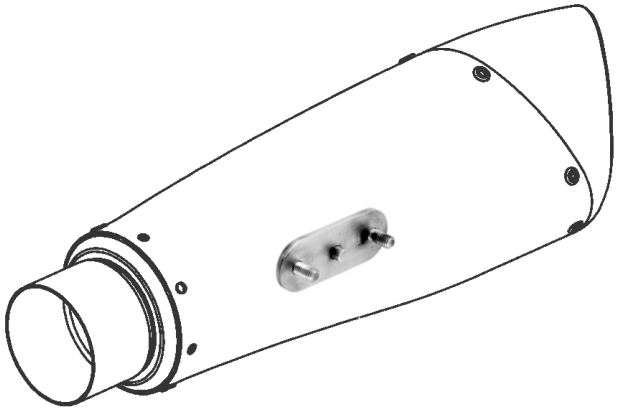

DB-KILLER Ø 40

Cod. PAM.005.010

4-TRACK (DESTRO-RIGHT)

Cod. PAM.005.244 (INOX)

Cod. PAM.005.245 (TITANIUM)

4-TRACK (SINISTRO-LEFT)

Cod. PAM.005.246 (INOX)

Cod. PAM.005.247 (TITANIUM)

STAINLESS BRACKET Thk 1.2

Cod. PAM.005.232

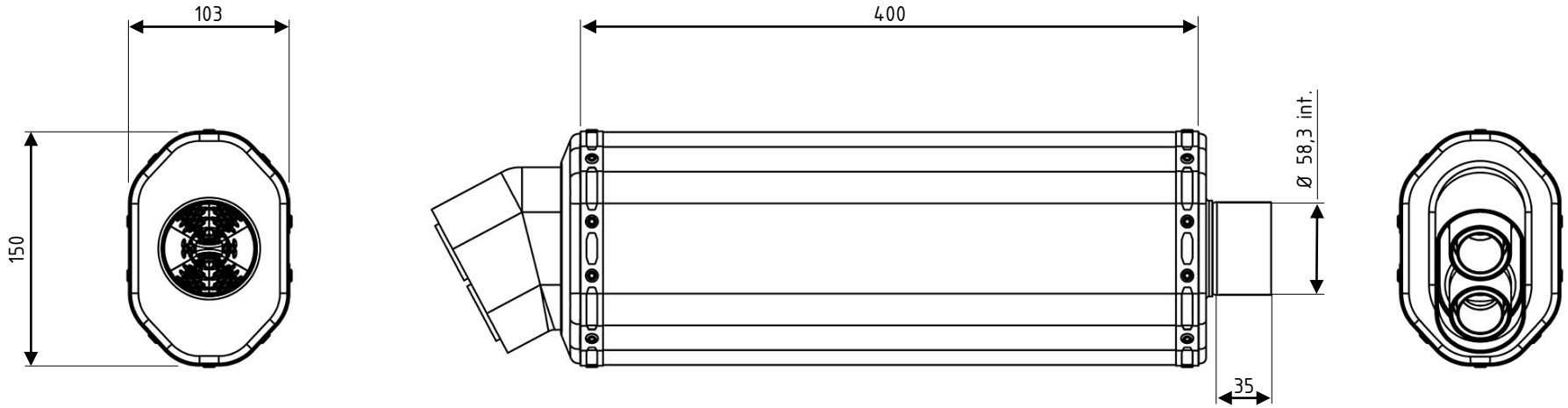
103
400
150
Ø 58,3 int.
35

hpcorse
MADE IN ITALY

hpcorse
MADE IN ITALY

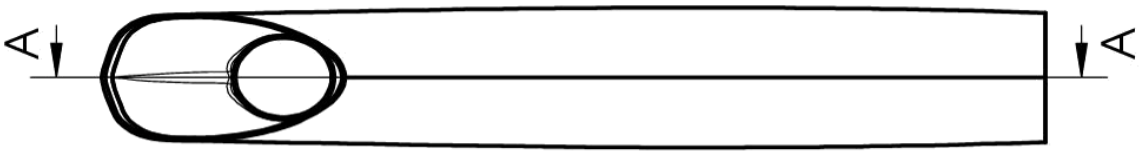

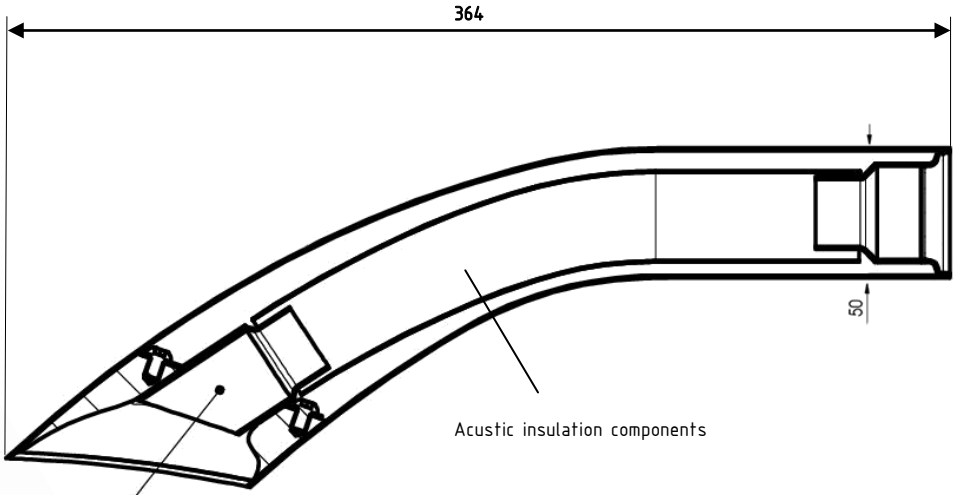

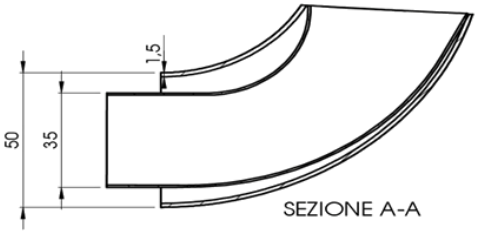

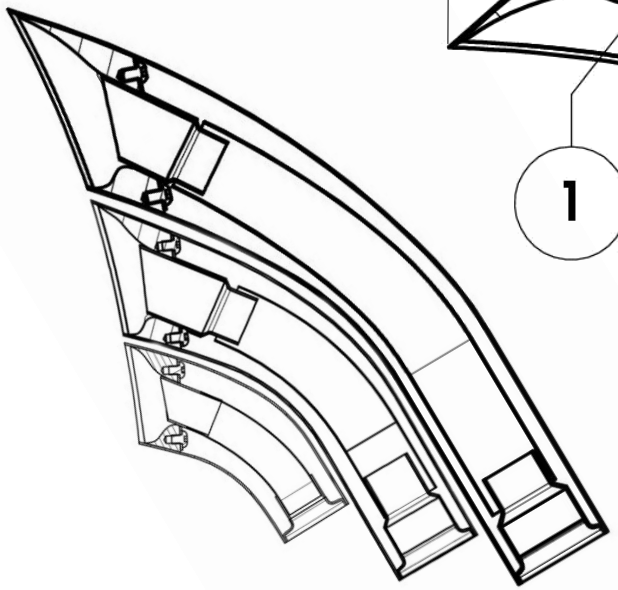

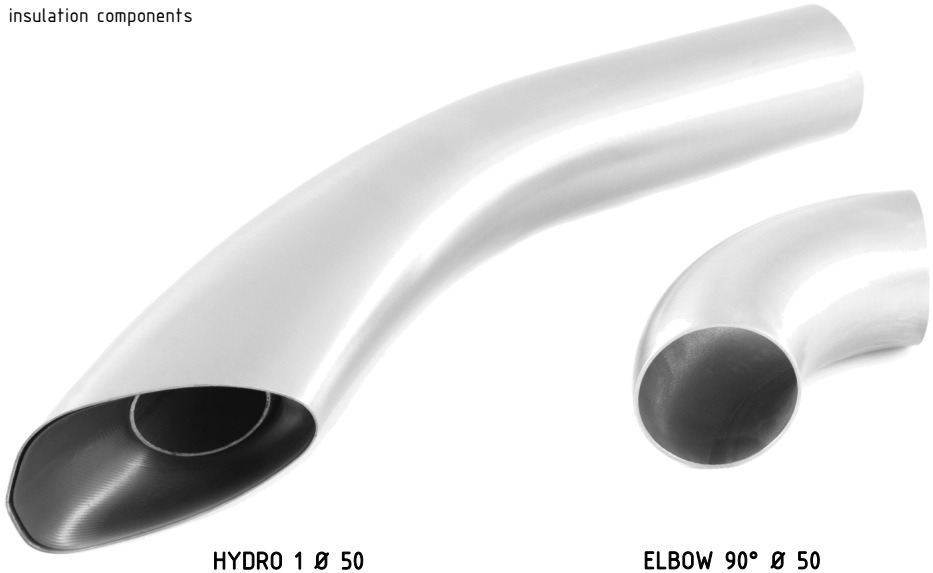

HYDRO 1 Ø 50

Cod. PAM.006.246

ELBOW 90° Ø 50

Cod. PAM.006.171

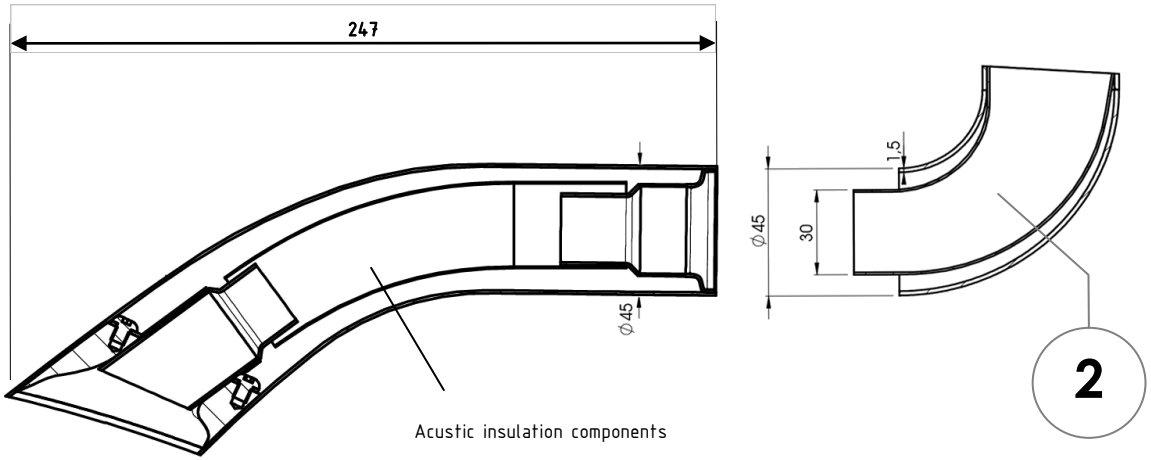

HYDRO 2 Ø 45

Cod. PAM.006.247

ELBOW 90° Ø 45

Cod. PAM.006.172

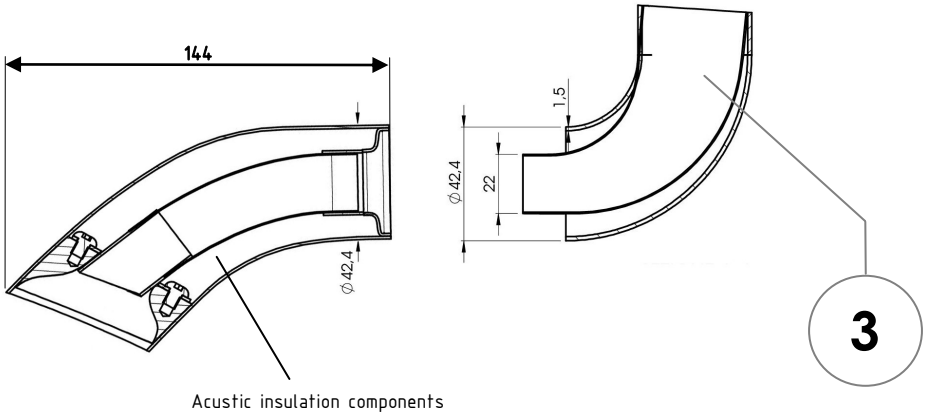

HYDRO 3 Ø 42,4

Cod. PAM.006.248

ELBOW 90° Ø 42,4

Cod. PAM.006.173

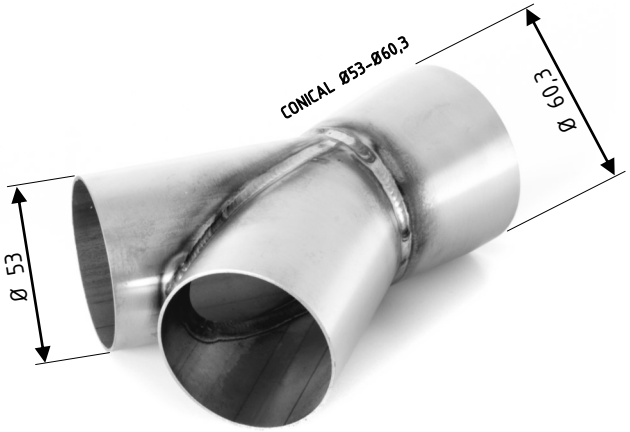

2 into 1 CONNECTOR

Cod. PAM.005.125

3 into 1 CONNECTOR

Cod. PAM.005.222

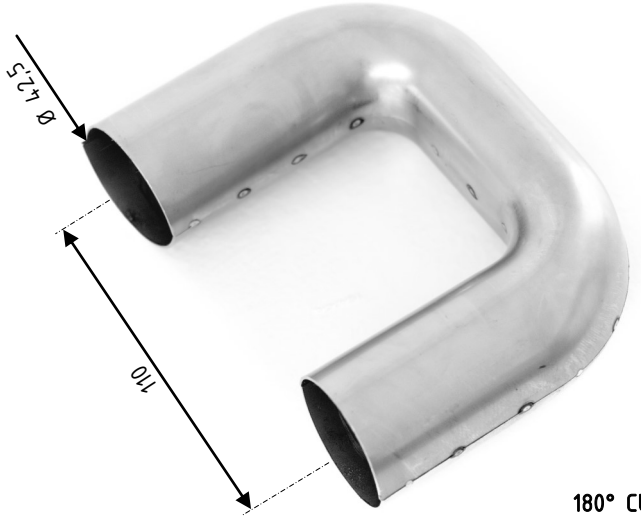

180° CURVE

Cod. PAM.005.221

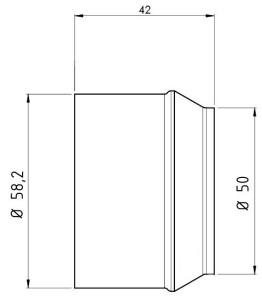

CONCENTRIC REDUCTION

Cod. PAM.005.115

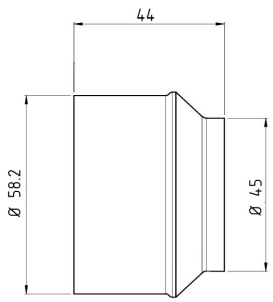

CONCENTRIC REDUCTION

Cod. PAM.005.117

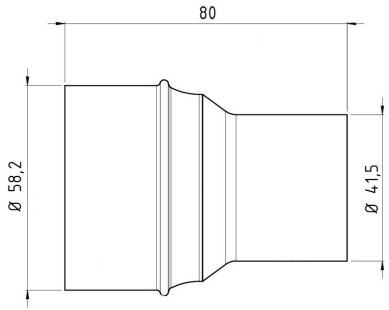

CONCENTRIC REDUCTION

Cod. PAM.005.114

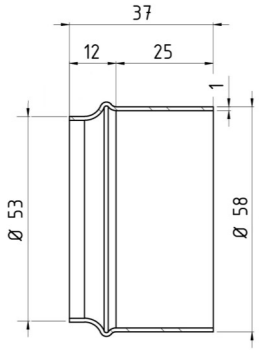

CONCENTRIC REDUCTION

Cod. PAM.005.119

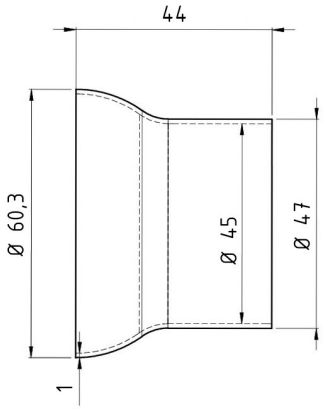

CONCENTRIC REDUCTION

Cod. PAM.005.107

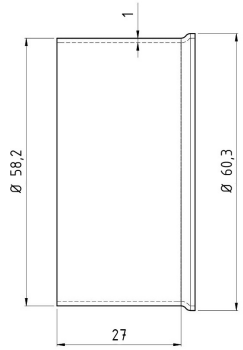

CONCENTRIC REDUCTION

Cod. PAM.005.118

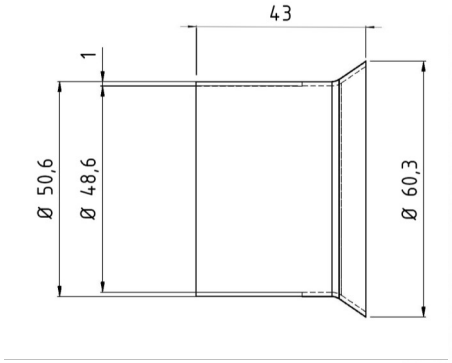

FEMALE WELDING JOINT

Cod. PAM.005.124

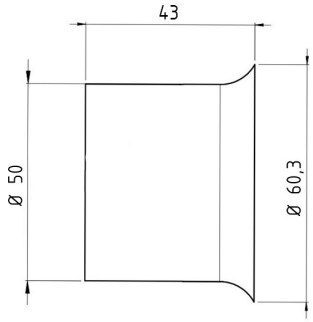

FEMALE WELDING JOINT

Cod. PAM.005.121

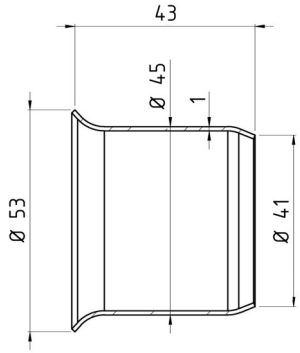

CONCENTRIC REDUCTION

Cod. PAM.005.109

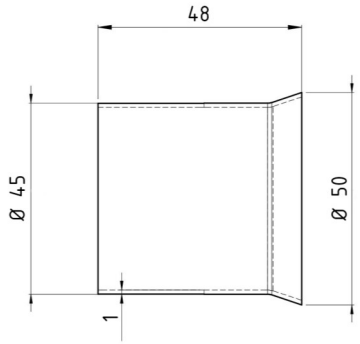

FEMALE WELDING JOINT

Cod. PAM.005.122

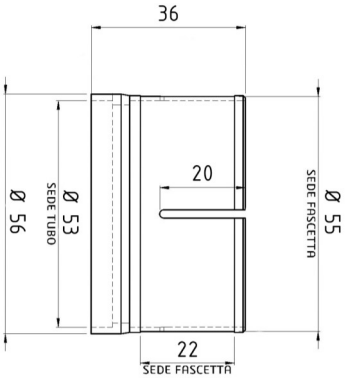

FEMALE WELDING JOINT

Cod. PAM.005.120

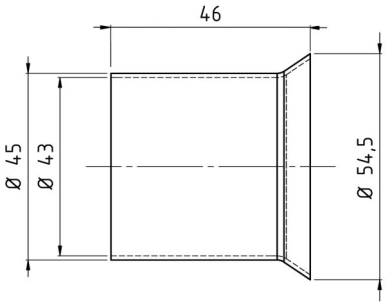

FEMALE WELDING JOINT

Cod. PAM.005.123

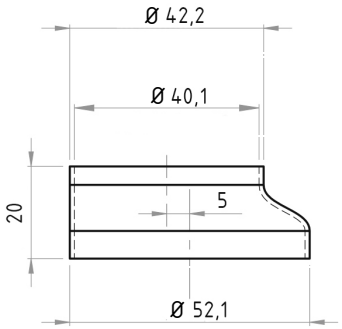

ECCENTRIC REDUCTION

Cod. PAM.005.223

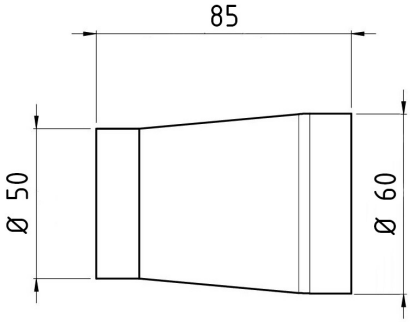

CONCENTRIC REDUCTION

Cod. PAM.005.112

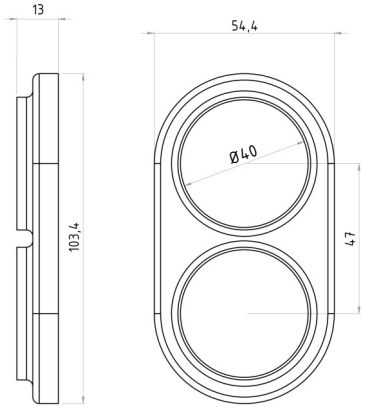

END-CAP

Cod. PAM.005.224

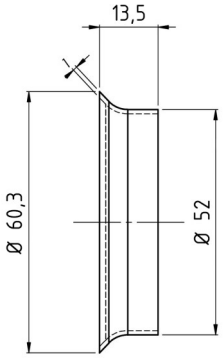

CONCENTRIC REDUCTION

Cod. PAM.005.110

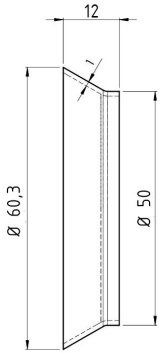

CONCENTRIC REDUCTION

Cod. PAM.005.116

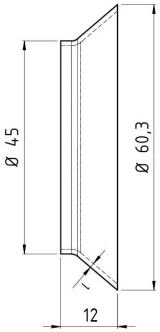

CONCENTRIC REDUCTION

Cod. PAM.005.113

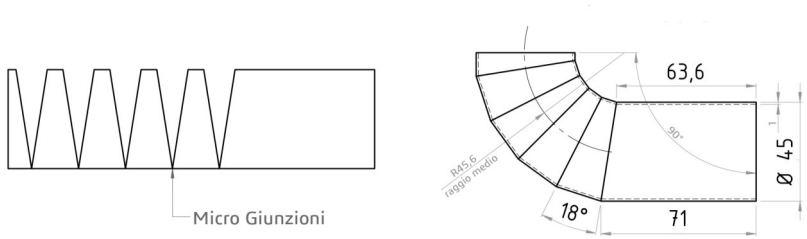

CURVE INTO WEDGES

Cod. PAM.005.189

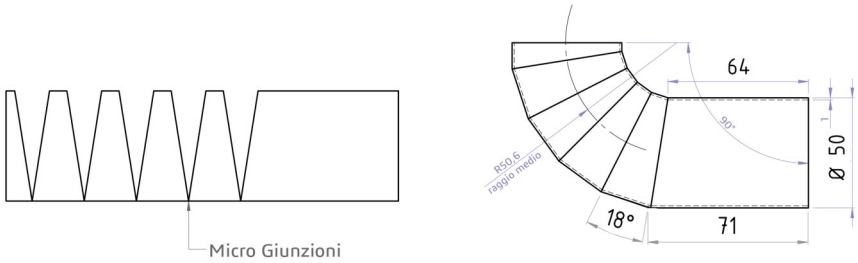

CURVE INTO WEDGES

Cod. PAM.005.190

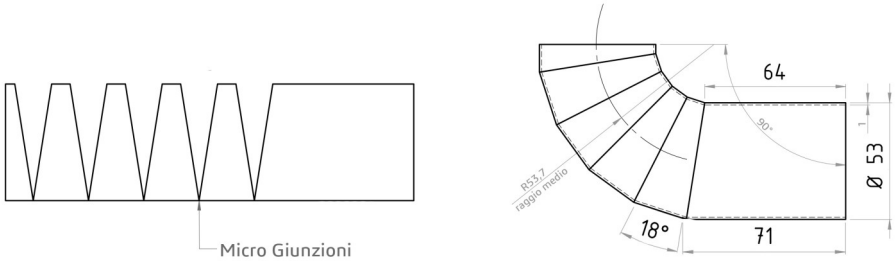

CURVE INTO WEDGES

Cod. PAM.005.191

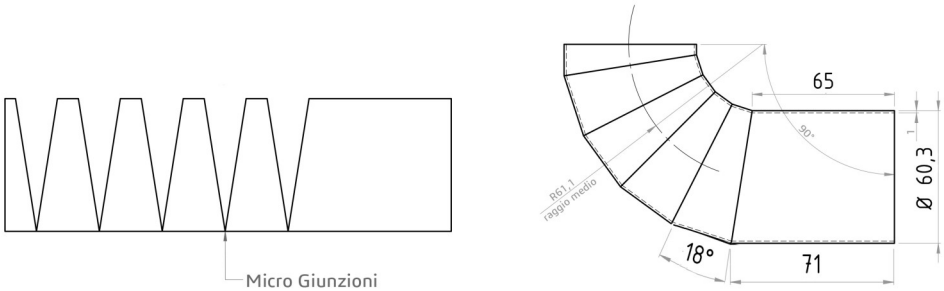

CURVE INTO WEDGES

Cod. PAM.005.192

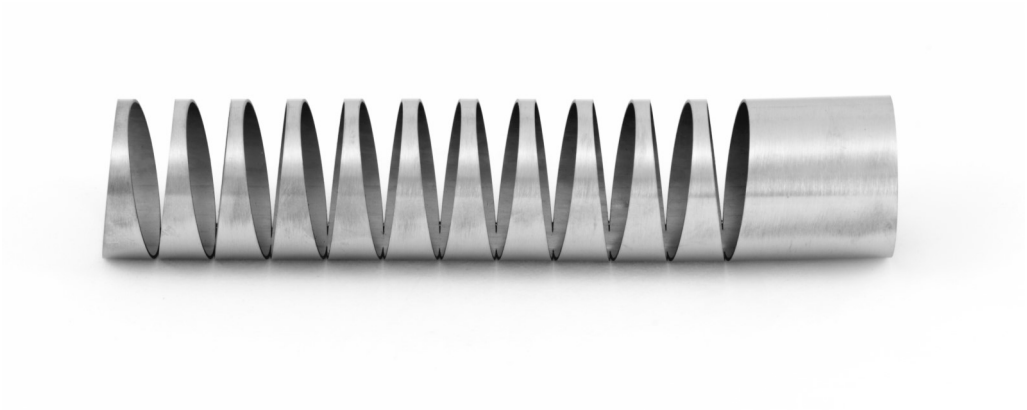

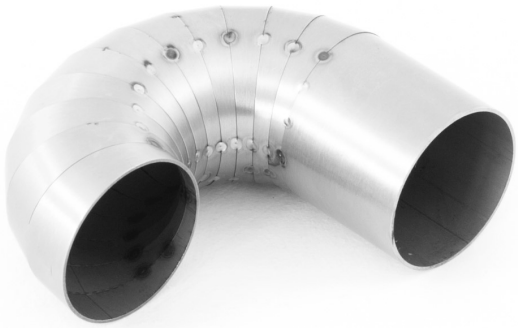

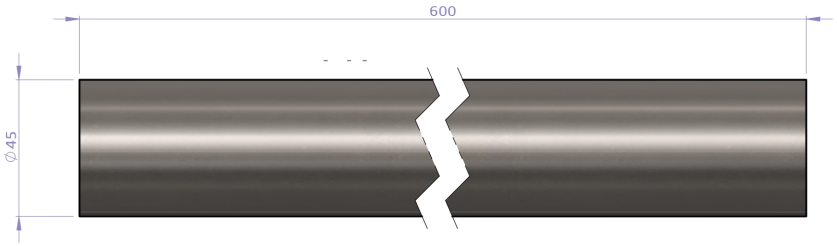

PIPE Ø 45 Sp.1 L 600

Cod. PAM.005.183

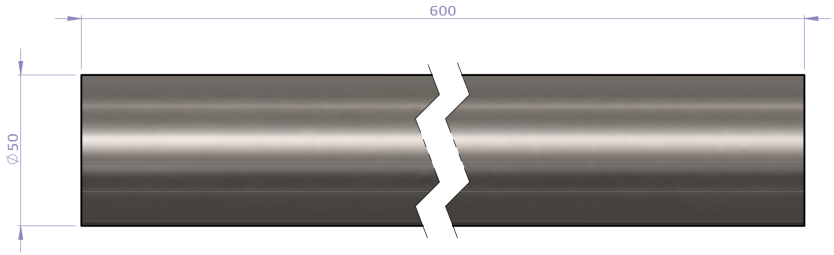

PIPE Ø 50 Sp.1 L 600

Cod. PAM.005.184

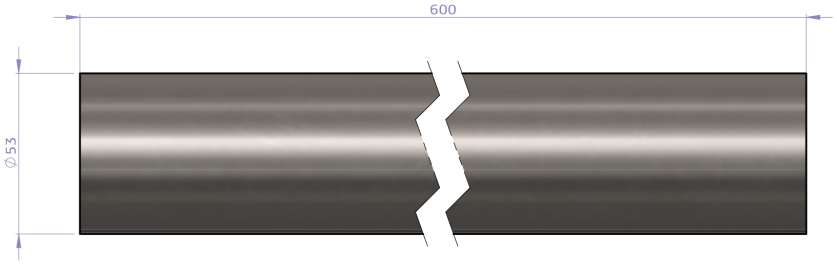

PIPE Ø 53 Sp.1 L 600

Cod. PAM.005.185

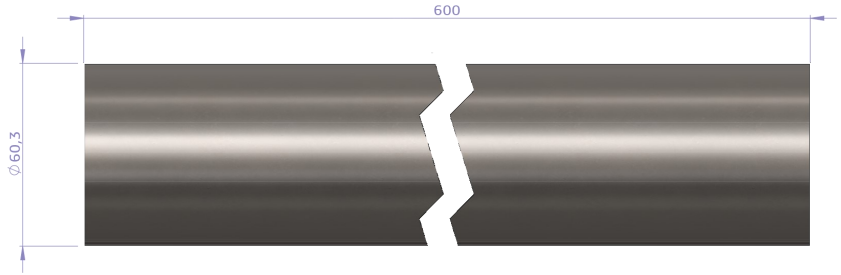

PIPE Ø 60,3 Sp.1,2 L 600

Cod. PAM.005.186

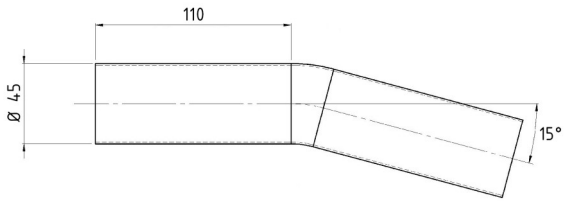

BENDED PIPE Ø 45x1 15°

Cod. PAM.005.145

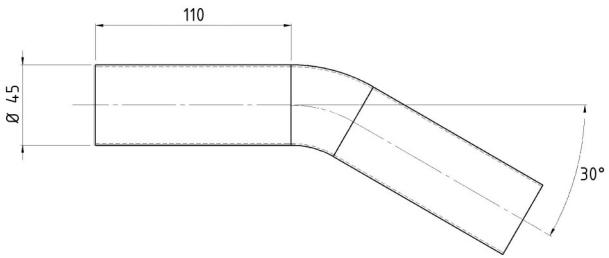

BENDED PIPE Ø 45x1 30°

Cod. PAM.005.144

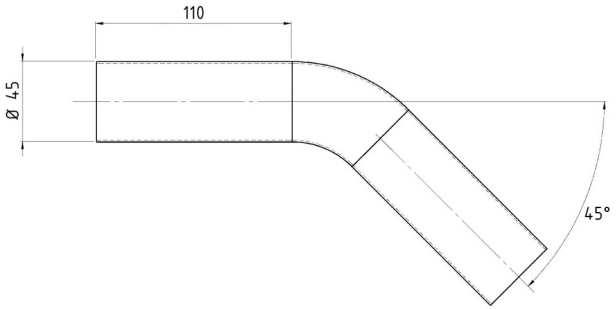

BENDED PIPE Ø 45x1 45°

Cod. PAM.005.143

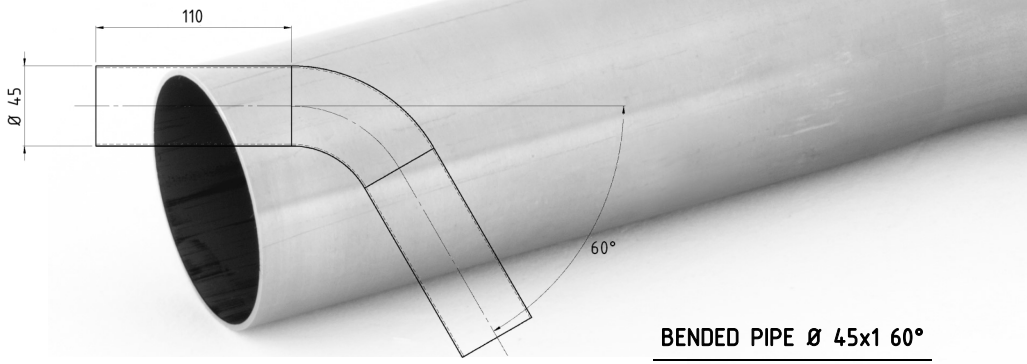

BENDED PIPE Ø 45x1 60°

Cod. PAM.005.142

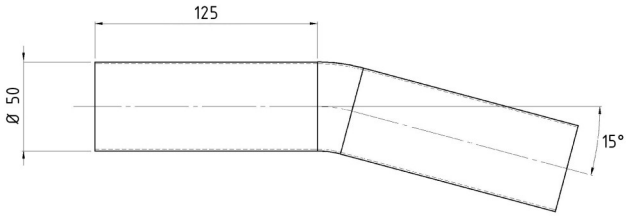

BENDED PIPE Ø 50x1 15°

Cod. PAM.005.131

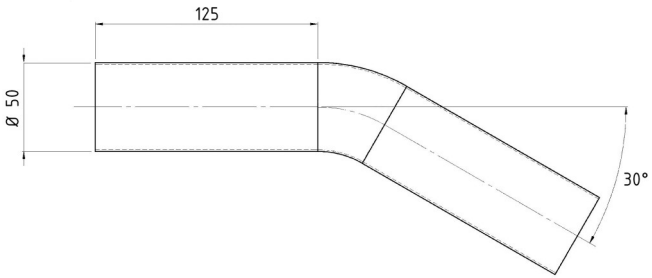

BENDED PIPE Ø 50x1 30°

Cod. PAM.005.130

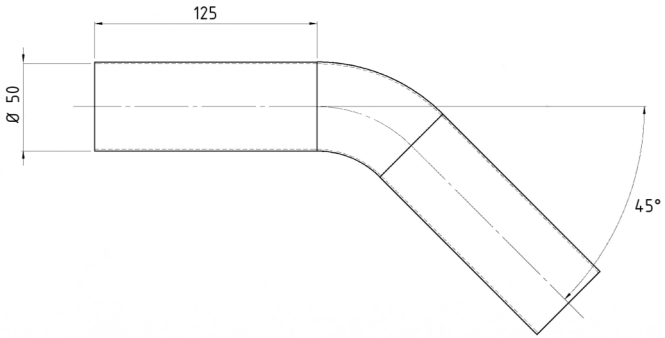

BENDED PIPE Ø 50x1 45°

Cod. PAM.005.129

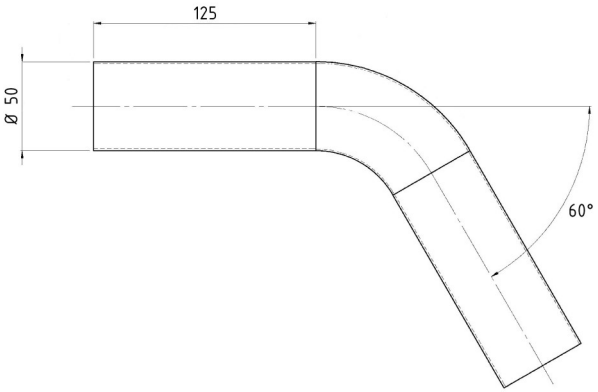

BENDED PIPE Ø 50x1 60°

Cod. PAM.005.132

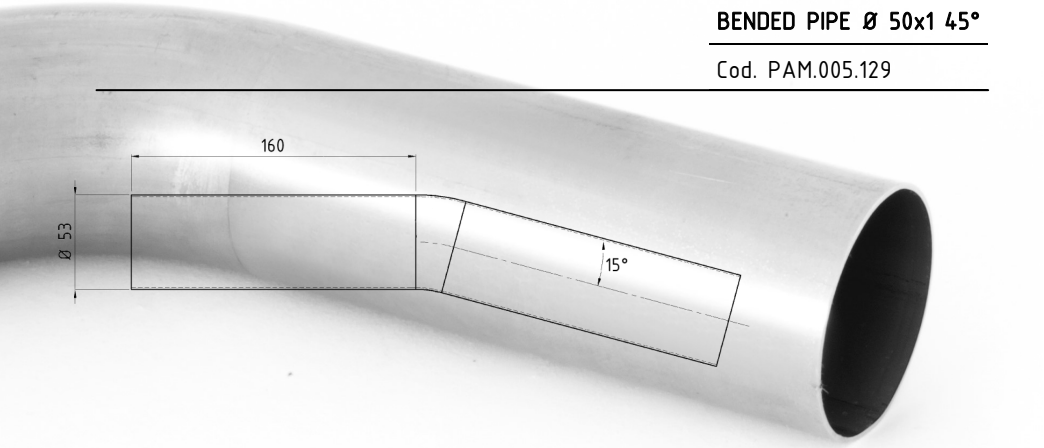

BENDED PIPE Ø 53x1 15°

Cod. PAM.005.134

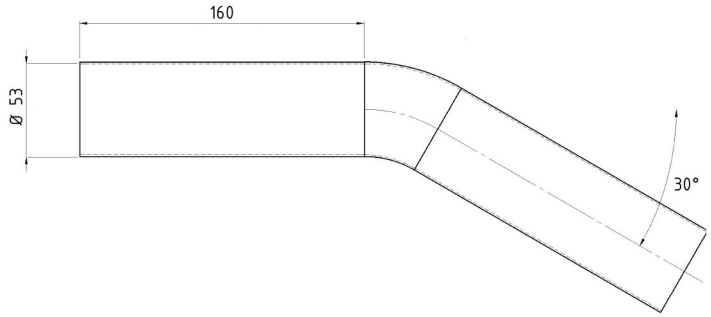

BENDED PIPE Ø 53x1 30°

Cod. PAM.005.135

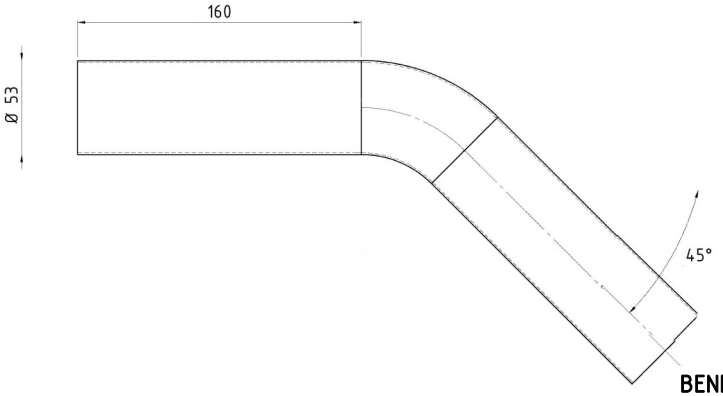

BENDED PIPE Ø 53x1 45°

Cod. PAM.005.136

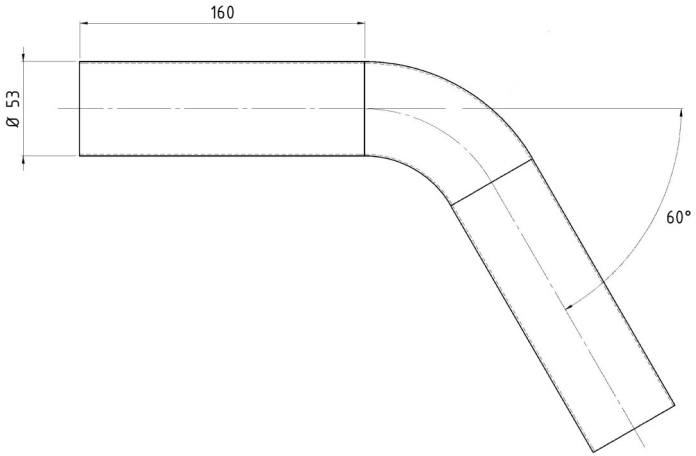

BENDED PIPE Ø 53x1 60°

Cod. PAM.005.137

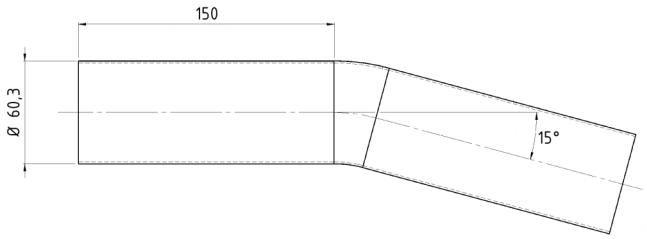

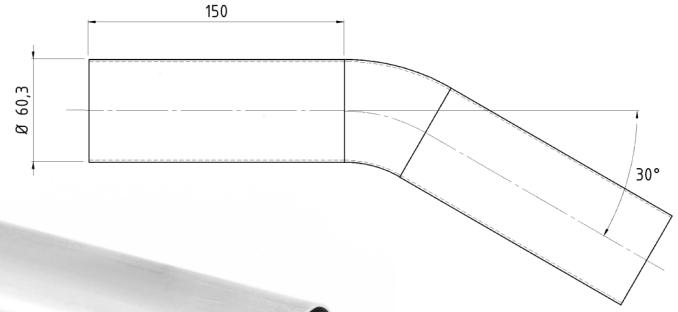

BENDED PIPE Ø 60,3x1,2 15°

Cod. PAM.005.138

BENDED PIPE Ø 60,3x1,2 30°

Cod. PAM.005.139

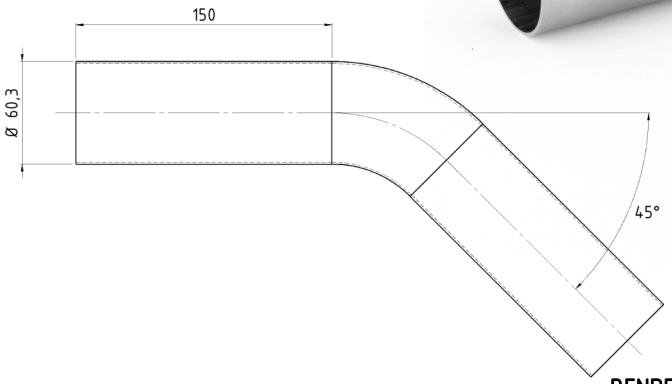

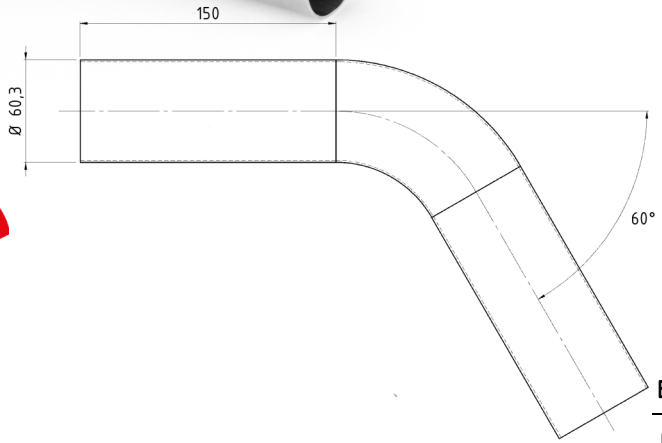

BENDED PIPE Ø 60,3x1,2 45°

Cod. PAM.005.140

BENDED PIPE Ø 60,3x1,2 60°

Cod. PAM.005.141

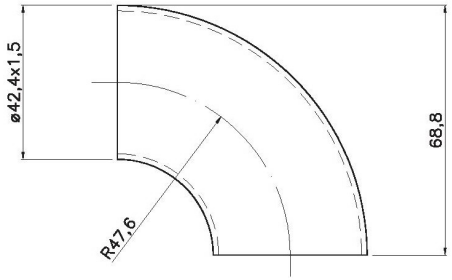

ELBOW Ø 42,4x1,5 90°

Cod. PAM.005.126

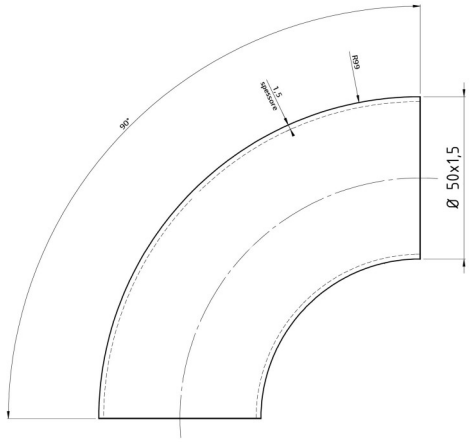

ELBOW Ø 50x1,5 90°

Cod. PAM.005.127

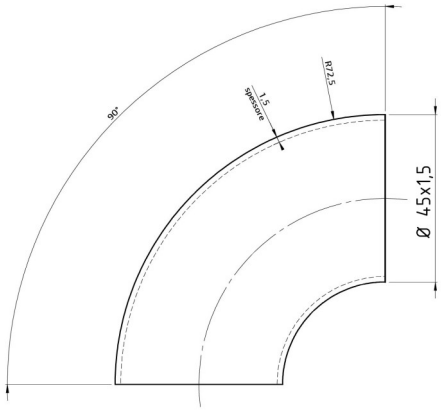

ELBOW Ø 45x1,5 90°

Cod. PAM.005.128

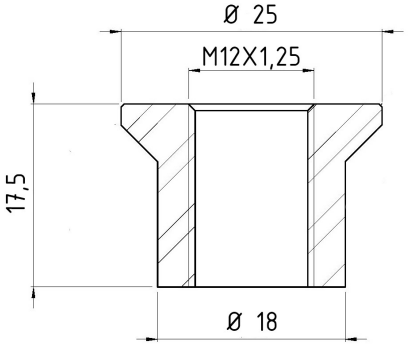

LAMBDA NIPPLE M12X1.5

Cod. PAM.005.164

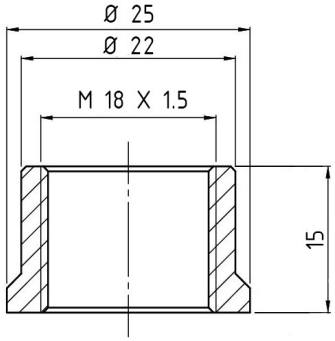

LAMBDA NIPPLE M18X1.5

Cod. PAM.005.165

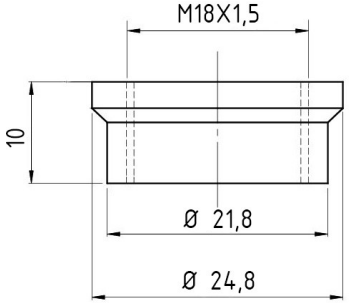

LAMBDA NIPPLE M18X1.5

Cod. PAM.005.163

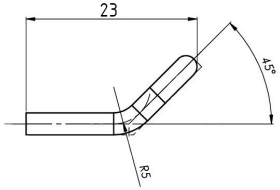

HOOK SPRING

Cod. PAM.005.159

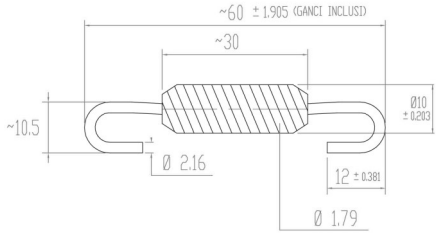

SPRING

Cod. PAM.005.154

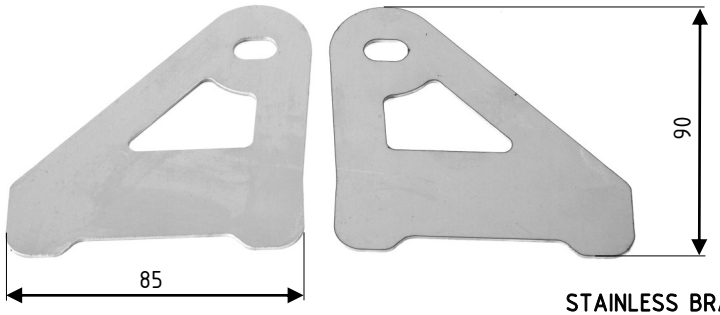

STAINLESS BRACKET Thk 1.2

Cod. PAM.005.207

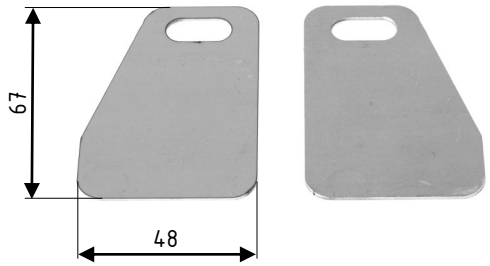

STAINLESS BRACKET Thk 1.2

Cod. PAM.005.208

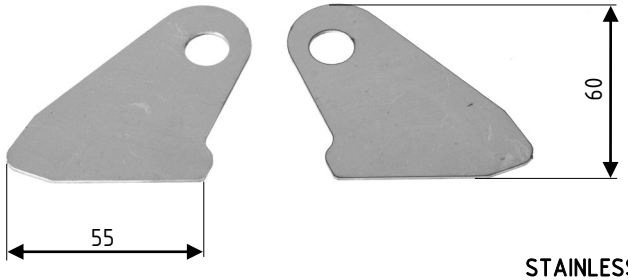

STAINLESS BRACKET Thk 1.2

Cod. PAM.005.009

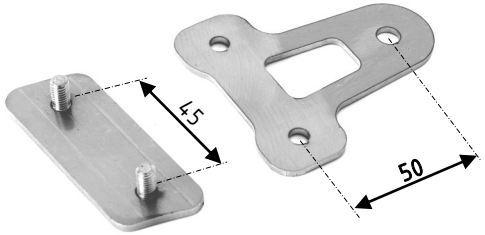

STAINLESS BRACKET Thk 2.5

Cod. PAM.005.216

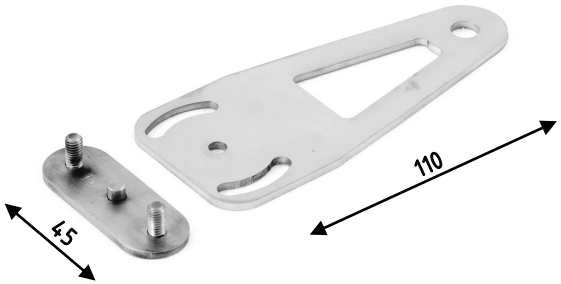

STAINLESS BRACKET Thk 1.2

Cod. PAM.005.217

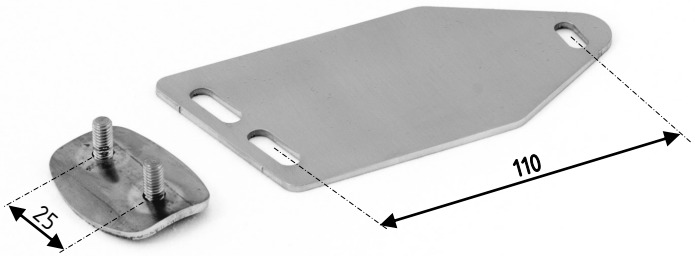

STAINLESS BRACKET Thk 2.5

Cod. PAM.005.218

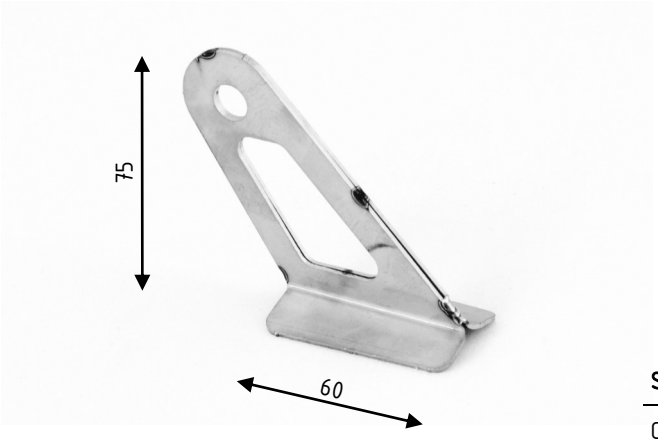

STAINLESS BRACKET

Cod. PAM.005.213

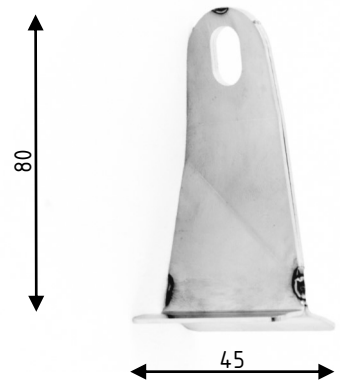

STAINLESS BRACKET

Cod. PAM.005.211

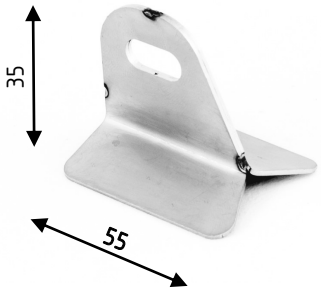

STAINLESS BRACKET

Cod. PAM.005.210

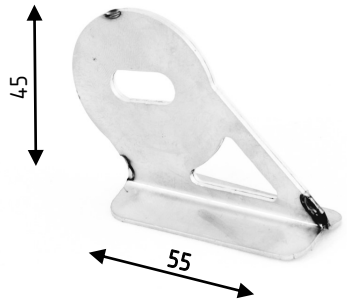

STAINLESS BRACKET

Cod. PAM.005.212

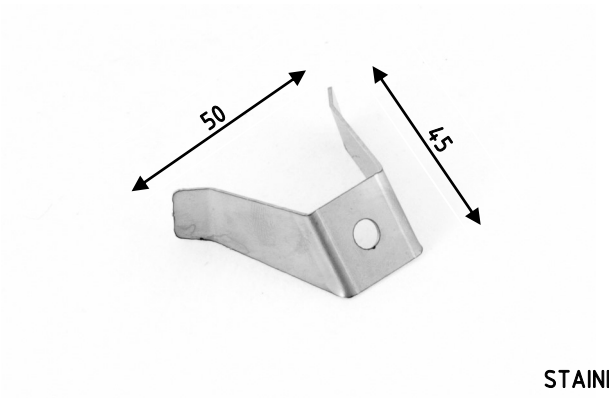

STAINLESS BRACKET

Cod. PAM.005.214

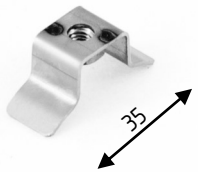

STAINLESS BRACKET

Cod. PAM.005.215

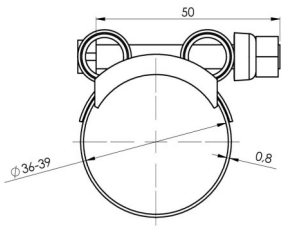

INOX CLAMP Ø 36-39

Cod. PAM.005.173

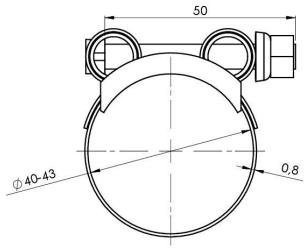

INOX CLAMP Ø 40-43

Cod. PAM.005.172

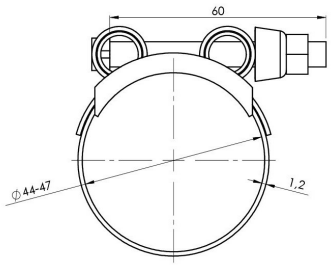

INOX CLAMP Ø 44-47

Cod. PAM.005.171

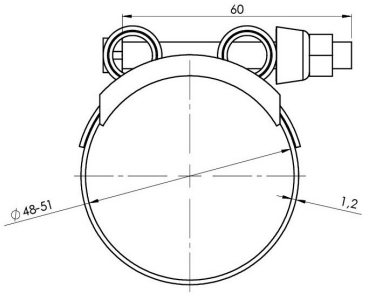

INOX CLAMP Ø 48-51

Cod. PAM.005.170

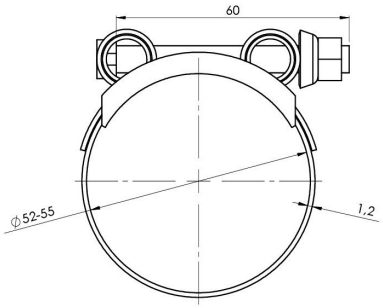

INOX CLAMP Ø 52-55

Cod. PAM.005.169

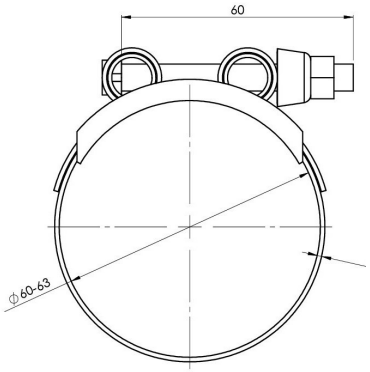

INOX CLAMP Ø 60-63

Cod. PAM.005.168

STICKER 26 x 8 mm

Cod. PAM.005.203

STICKER 138 x 45 mm

Cod. PAM.005.204

STICKER 26 X 8 mm

Cod. PAM.005.205

STICKER 138 X 45 mm

Cod. PAM.005.206

SERVICE

CERAMIC COATING

TRATTAMENTO CERAMICO

A tutti i nostri clienti che desiderano uno scarico ceramizzato, offriamo il servizio "ceramic service". E' possibile richiedere un preventivo gratuito inviandoci una fotografia del pezzo. Il prodotto prima della ceramizzazione subirà un trattamento di pulizia superficiale mediante micropallinatura per cui ogni scritta superficiale verrà rimossa.Su richiesta è possibile incidere al laser il logo HP CORSE.
Il rivestimento ceramico ha migliorato oltre all'estetica, la durezza superficiale, l'abrasione e la resistenza, il tutto in un'applicazione ceramica molto sottile. Questo obbiettivo è stato raggiunto mediante una tecnologia avanzata in resina che consente l'incorporazione delle ceramiche più performanti.
Disponibile in 2 colori, bianco e nero.

CERAMIC COATING

*To all our customers who want a ceramic exhaust, we offer the "ceramic service". It is possible to request a free estimate by sending us a picture of the piece. The product before the ceramization will undergo a surface cleaning treatment by micro-shaping so that any superficial writing will be removed.*On request it is possible to laser engrave the HP CORSE logo.
Ceramic coating improved hardness, abrasion and resistance, all in a thinner application. We have accomplished this by developing an advanced resin technology that enables the incorporation of the highest performance engineered ceramics.
Available in 2 modern, earth-tone colors black and white.

512 M

PLAN B

MOTORCYCLE

BARRALESTA

TORO MOTO

SCRAMBLER
ROUGH CRAFTS

SCRAMBLER

DEBOLEX

ENGINEERING

ORANGE

PLAN B

MOTORCYCLE

KURIA
OFFICINE
GP-DESIGN

HP CORSE s.r.l.

C.F. P.I. 02668231208

Administrative headquarters and offices

Via Romitino 11-2, 40055 Castenaso (BOLOGNA)

By Steelform s.r.l.

C.F. P.I. 01698860309

Registered office

Via Max Piccini, 16-33061 RIVIGNANO-TEOR (UD)

Administrative headquarters and offices

Via Udine, 60-33061 RIVIGNANO-TEOR (UD)

www.hpcorse.com

info@hpcorse.com

commerciale@hpcorse.com

Tel. +39 0432 822 200 Fax +39 0432 822 231

Il brand "HPCORSE" e i prodotti presentati nella brochure sono di HPCORSE

(tutti i diritti sono riservati)